Work plan

Deadlines

- 2021-03-08 Choose a project proposal and send your choice via email to epsatisep@gmail.com
- 2021-03-18 Define the **Project Backlog** (what must be done and key deliverables - every member should preferably participate in every task), **Global Sprint Plan**, **Initial Sprint Plan** (which tasks should be included, who does what) and **Release Gantt Chart** of the project and insert them on the wiki (planning)
- 2021-03-24 Upload the “black box” **System Diagrams** & **Structural Drafts** to the wiki
- 2021-04-07 Upload the detailed **System Schematics & Structural Drawings** to the wiki and do the **cardboard scale model** of the structure
- 2021-04-14 Upload the **List of Materials (what & quantity)** to the wiki
- 2021-04-17 Upload the **Interim Report and Presentation** to the wiki. The report must contain the the following chapters: Introduction, Project Management, State of the Art, Marketing Plan, Eco-efficiency Measures for Sustainability, Ethical and Deontological Concerns, Proposed Solution and Bibliography. In particular, the Project Management chapter includes the updated project progress register, the sprint report for completed sprints (tasks that were included, statuses, assignees, allocations) and the updated release Gantt chart
- 2021-04-22 Interim Presentation, Discussion and Peer, Teacher and Supervisor Feedbacks
- 2021-04-28 Complete the **List of Materials (local providers & price, including VAT and transportation)** to the wiki
- 2021-05-15 Upload refined Interim Report (based on Teacher & Supervisor Feedback)
- 2021-06-08 Upload the results of the **Functional Tests** to the wiki
- 2021-06-19 Upload the **Final Report, Presentation, Video, Paper, Poster and Manual**
- 2021-06-23 Final Presentation, Individual Discussion and Assessment
- 2021-06-28:
    1. Update the wiki, report, paper with all suggested corrections
    2. Place in the files section of the MS Teams channel of your team a **folder with the refined deliverables (source + PDF) together with all code and drawings produced**
    3. Hand in to the EPS coordinator a **printed copy of the refined report and poster**
- 2021-06-30:
    1. Hand in the **prototype and user manual** to the client
    2. Receive the **EPS@ISEP certificate**
    3. Bring **typical food** from your country

Project Plan

Define your optimal sprint duration and plan your sprints until the project end using Global Sprint Plan Table 1.

Table 1: Global Sprint Plan

Sprint	Start	Finish	Status
1	01.03.2021	07.03.2021	X

Sprint	Start	Finish	Status
2	08.03.2021	14.03.2021	X
3	15.03.2021	21.03.2021	X
4	22.03.2021	28.03.2021	X
5	29.03.2021	11.04.2021	X
6	12.04.2021	18.04.2021	X
7	19.04.2021	25.04.2021	X
8	26.04.2021	02.05.2021	X
9	03.05.2021	09.05.2021	X
10	10.05.2021	16.05.2021	X
11	17.05.2021	23.05.2021	X
12	24.05.2021	30.05.2021	X
13	31.05.2021	13.06.2021	X
14	14.06.2021	20.06.2021	X
15	21.06.2021	30.06.2021	In progress

Build your project backlog, including all relevant tasks/deliverables, using Project Backlog Table 2. Prioritize all backlog items (PBI), keeping higher priority items at the top, and lower priority at the bottom.

Table 2: Project Backlog

PBI	Title	Status
E1.U1.	Weekly classes	Done
E1.U2.	Homeworks	Done
E3.U1.	Design thinking process for the product	Done
E2.U1.	State of the Art	Done
E3.U2.	Define problem and scope for the product	Done
E3.U3.	Decide on the product specifications	Done
E3.U4.	“Black box” System Diagrams & Structural Drafts	Done
E3.U5.	System Schematics & Structural Drawings	Done
E2.U2.	Interim Report	Done
E3.U6.	3D model	Done
E4.U1.	List of Materials (what & quantity)	Done
E4.U2.	List of Materials (local providers & price, including VAT and transportation)	Done
E4.U3.	Functional Tests	Done
E5.U1.	Design logo and brand identity	Done
E5.U2.	Create product landing page	Canceled after reviewing the backlog

PBI	Title	Status
E5.U3.	Purchase domain	Canceled after reviewing the backlog
E5.U4.	Select hosting providers	Canceled after reviewing the backlog
E4.U4.	User manual	Done
E2.U3.	Presentation	Done
E2.U4.	Video	Done
E2.U5.	Paper	Done
E2.U5.	Poster	Done

EPICS LEGEND:

- E1: Weekly classes
- E2: Final report
- E3: Solution design
- E4: Prototype
- E5: Website

Plan each sprint at its beginning (Sprint Planning session) using the Sprint Plan Table 3.

Table 3: Sprint Plan - Example

Sprint	Task	Duration (hours)	Responsible	Involved
4	Define problem and scope for the product (E3.U2.)	10	Team	G, A, N, M, S
4	State of the Art (E2.U1.)	24		
	*subtask: Make a comparison between state-of-the-art solutions (low, medium, high impact)	8	G and M	G, A, N, M, S
	*subtask: Conclusions and review the final State of the Art Report	16	S and A	G, A, N, M, S
4	“Black box” System Diagrams & Structural drafts (E3.U4.)	30		

Sprint	Task	Duration (hours)	Responsible	Involved
	*subtask: Research on the subject	10	M and N	G, A, N, M, S
	*subtask: System Diagrams	10	G and S	G, A, N, M, S
	*subtask: Structural drafts	10	A and N	G, A, N, M, S
4	Weekly classes (E1.U1.)	20*5	Team	G, A, N, M, S
4	Homeworks (E1.U2.)	5	Team	G, A, N, M, S

All the other sprints are presented in the report.

Review each sprint at its end and update each item status on the Progress Register Table.

Each sprint is reviewed in the report.

Identify key project deliverables (when they will be started and completed) and build a release Gantt chart. See Figure 1 for inspiration.

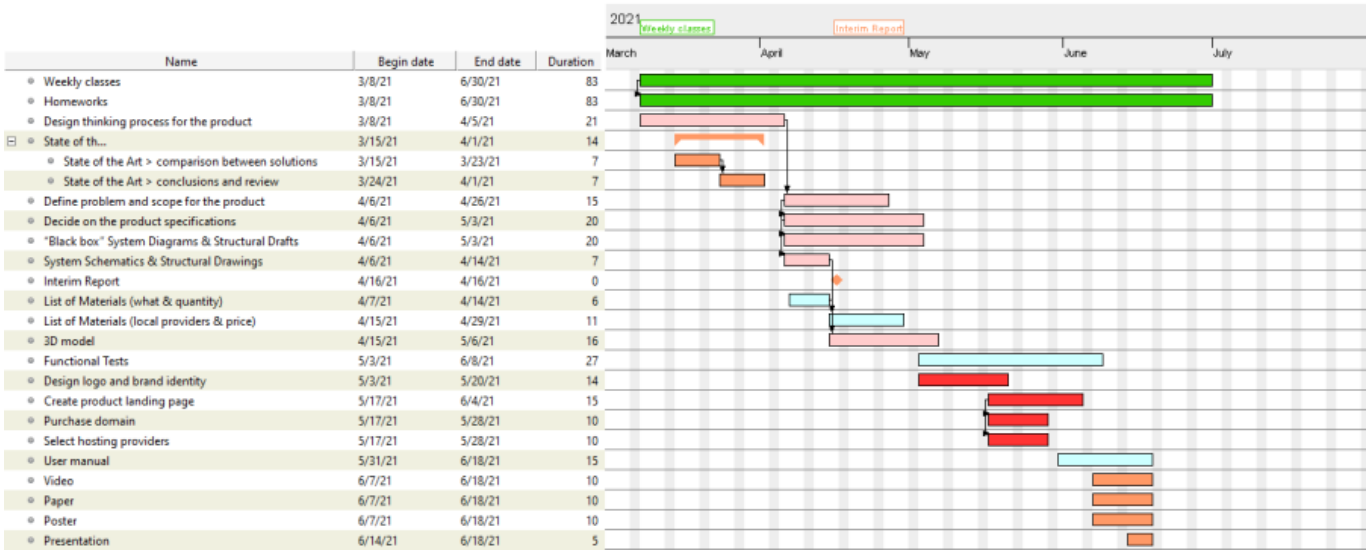

Figure 1: Release Gantt chart

“Black box” System Diagrams

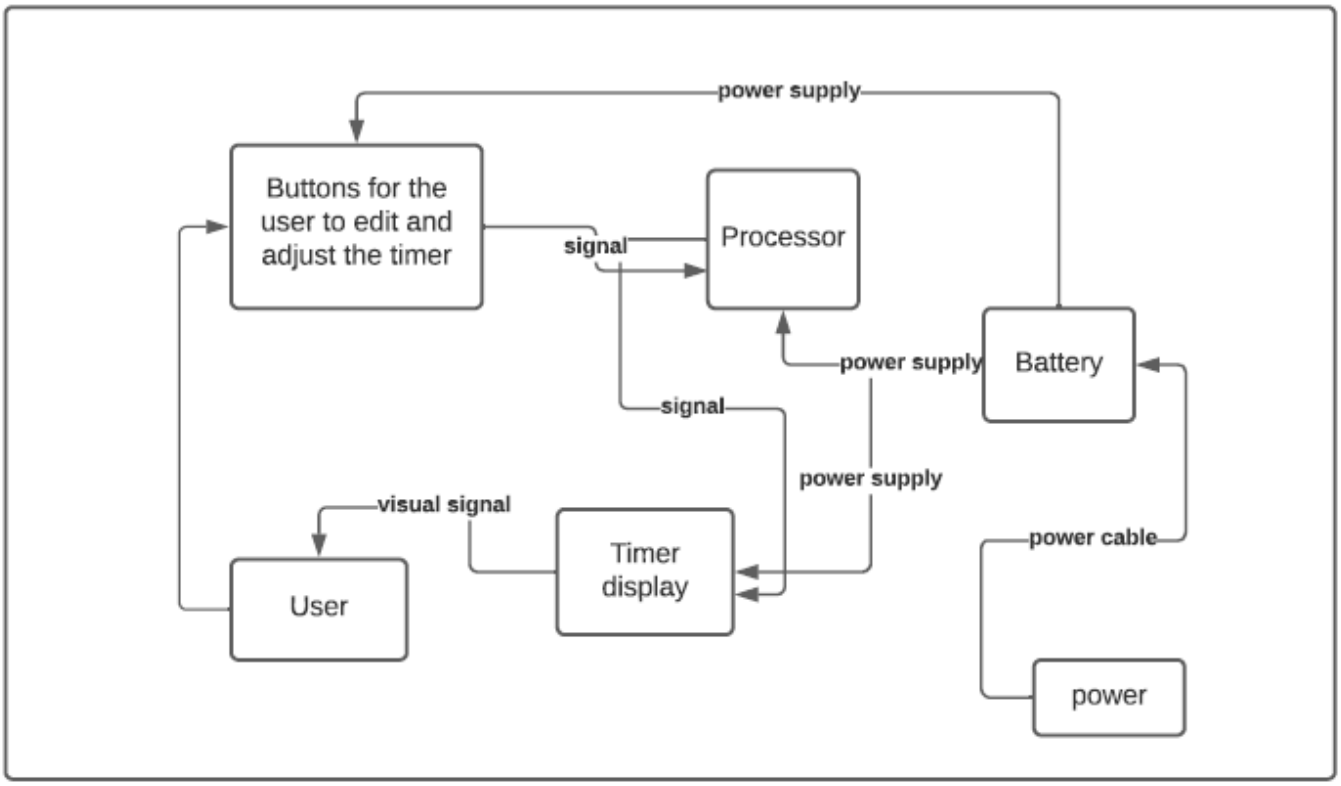

Figure 2: Black box diagram

From:
https://www.eps2021-wiki3.dee.isep.ipp.pt/ - **EPS@ISEP**

Permanent link:
https://www.eps2021-wiki3.dee.isep.ipp.pt/doku.php?id=plan

Last update: **2021/06/19 22:38**